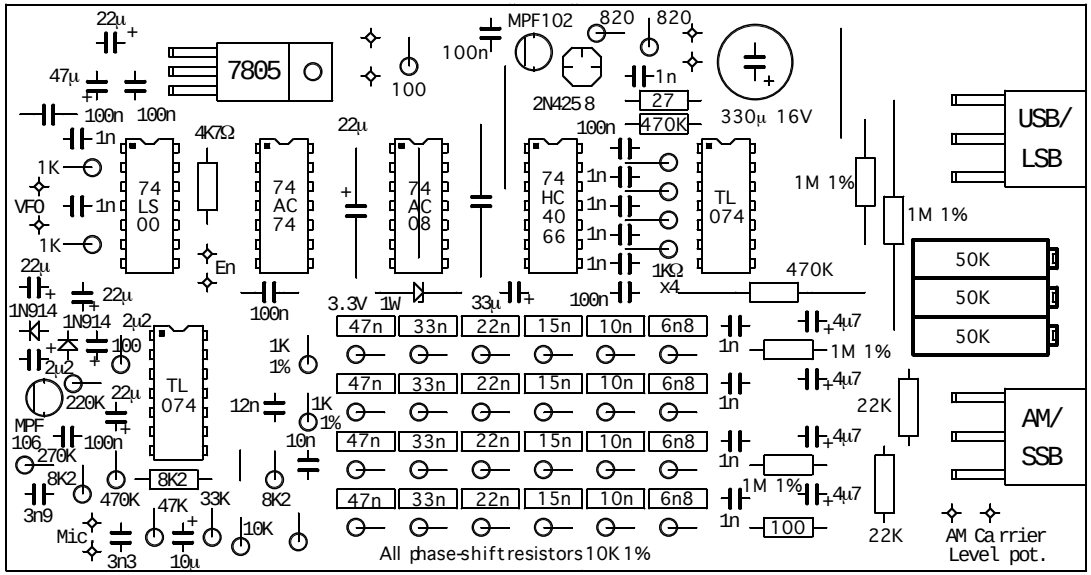

22µ
47µ
100n
100n
7805
100
100n
MPF102
820
820
2N4258
1n
27
470K
330µ 16V
USB/
LSB
1n
1K
VFO
1n
1K
74
LS
00
4K7Ω
74
AC
74
22µ
74
AC
08
74
HC
40
66
100n
1n
1n
1n
1n
TL
074
1M 1%
1M 1%
50K
50K
50K
En
22µ
22µ
1N914
1N914
2µ2
100
2µ2
220K
22µ
MPF
106
100n
270K
8K2
3n9
470K
8K2
47K
33K
Mic
3n3
10µ
10K
TL
074
100n
1K
1%
12n
1K
1%
10n
8K2
3.3V
1W
33µ
100n
1KΩ
x4
470K
47n
33n
22n
15n
10n
6n8
1n
4µ7
1M 1%
22K
AM/
SSB
100
22K
AM Carrier
Level pot.
All phase-shift resistors 10K 1%